ROITHNER LASERTECHNIK GmbH
WIEDNER HAUPTSTRASSE 76 1040 VIENNA AUSTRIA
TEL. +43 1 586 52 43 -0, FAX. -44, OFFICE@ROITHNER-LASER.COM

B5-433-B505

TECHNICAL DATA

LED, 5 mm InGaN

B5-433-B505 is a InGaN LED mounted on a lead frame with a clear epoxy lens.
On forward bias it emits a band of green light with a peak at 507 nm.

Specifications

- Structure: InGaN
- Peak Wavelength: typ. 507 nm
- Optical Output Power: typ. 8.5 cd
- Package: 5 mm clear epoxy

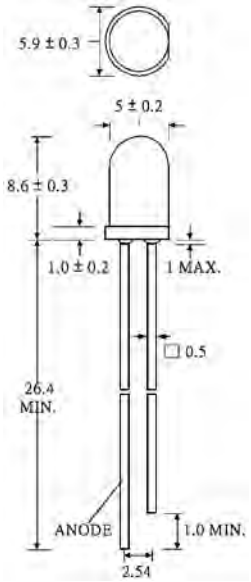

(Unit: mm)

Absolute Maximum Ratings (T_a=25°C)

Item	Symbol	Value	Unit
Power Dissipation	P_D	120	mW
Forward Current	I_F	30	mA
Pulse Forward Current *1	I_{FP}	100	mA
Reverse Voltage	V_R	5	V
Operating Temperature	T_{opr}	-40 … +85	°C
Storage Temperature	T_{stg}	-40 … +100	°C
Soldering Temperature *2	T_{sol}	260	°C

*1 1/10 duty cycle @ 1 KHz
*2 1.6mm from body, must be completed within 3 seconds

Electro-Optical Characteristics

Item	Symbol	Condition	Min.	Typ.	Max.	Unit
Forward Voltage	V_F	I_F = 20 mA	-	3.2	3.8	V
Reverse Current	I_R	V_R = 5 V	-	-	10	µA
Luminous Intensity	I_V	I_F = 20 mA	5.6	8.5	-	cd
Peak Wavelength	λ_P	I_F = 20 mA	-	507	-	nm
Dominant Wavelength	λ_D	I_F = 20 mA	-	505	-	nm
Half Width	$\Delta\lambda$	I_F = 20 mA	-	30	-	nm
Viewing Angle *	$2\Theta_{1/2}$	I_F = 20 mA	-	15	-	deg.

* Tolerance: -10 / +5 deg.

Notes

- Do not view directly into the emitting area of the LED during operation!
- The above specifications are for reference purpose only and subjected to change without prior notice.

ROITHNER LASERTECHNIK GmbH
WIEDNER HAUPTSTRASSE 76 1040 VIENNA AUSTRIA
TEL. +43 1 586 52 43 -0, FAX. -44, OFFICE@ROITHNER-LASER.COM

Typical Performance Curves

Forward Current – Forward Voltage

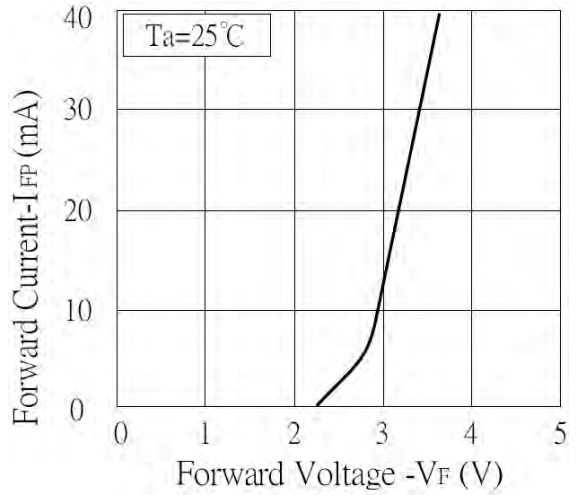

Luminous Intensity –Forward Current

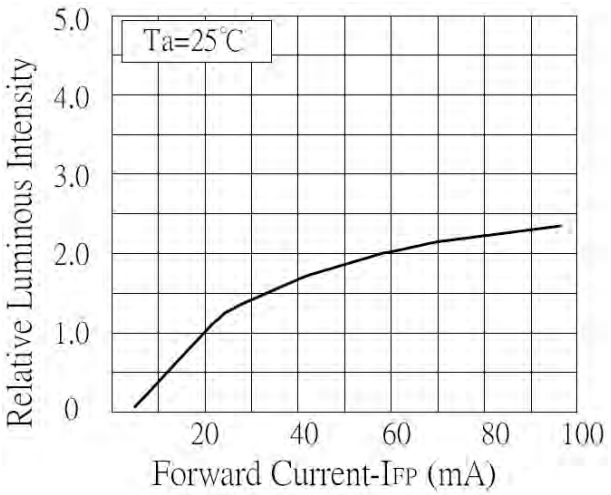

Luminous Intensity – Ambient Temperature

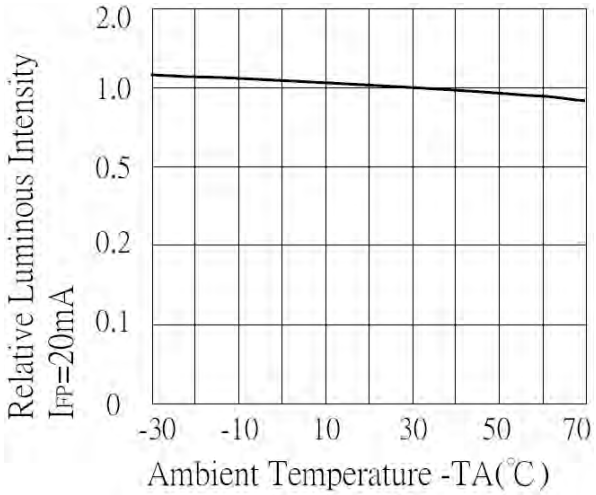

Max. Forward Current – Ambient Temperature

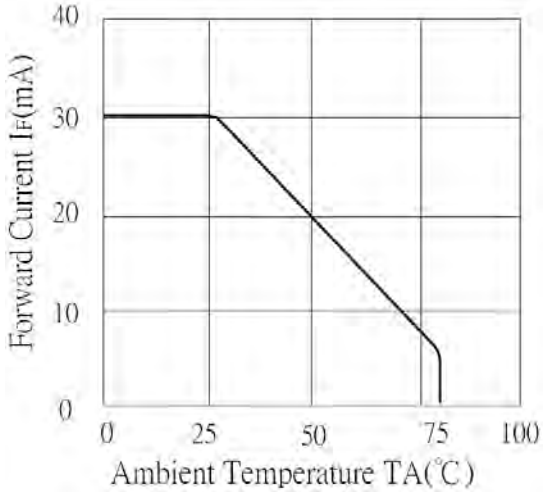

Peak Wavelength

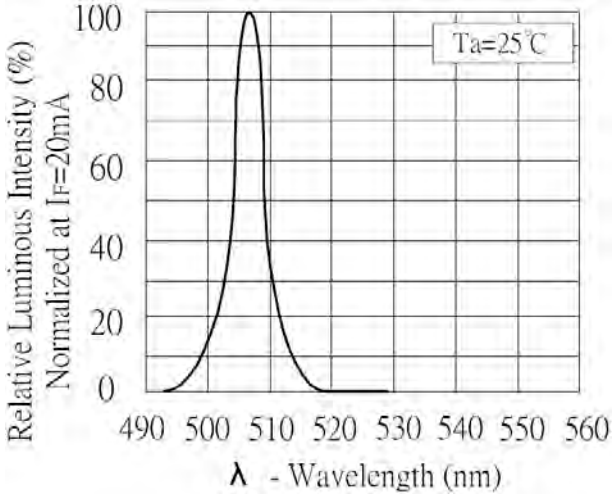

Radiation Diagram

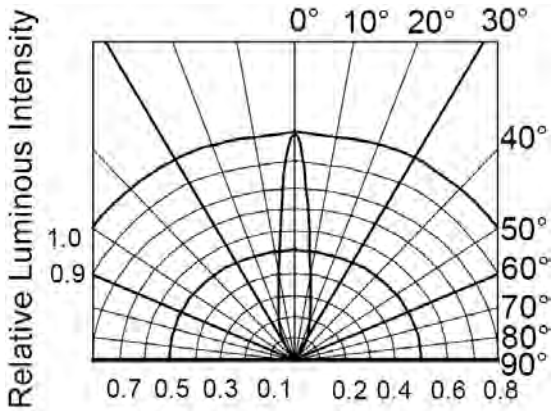

Precaution for Use

1. Cautions

- DO NOT look directly into the emitted light or look through the optical system. To prevent in adequate exposure of the radiation, wear protective glasses.

2. Lead Forming

- When forming leads, the leads should be bent at a point at least 3 mm from the base of the lead. DO NOT use the base of the leadframe as a fulcrum during lead forming.
- Lead forming should be done before soldering.
- DO NOT apply any bending stress to the base of the lead. The stress to the base may damage the LED's characteristics or it may break the LEDs.
- When mounted the LEDs onto the printed circuit board, the holes on the circuit board should be exactly aligned with the leads of LEDs. If the LEDs are mounted with stress at the leads, it causes deterioration of the lead and it will degrade the LEDs.

Recommended Land Layout (Unit: mm)

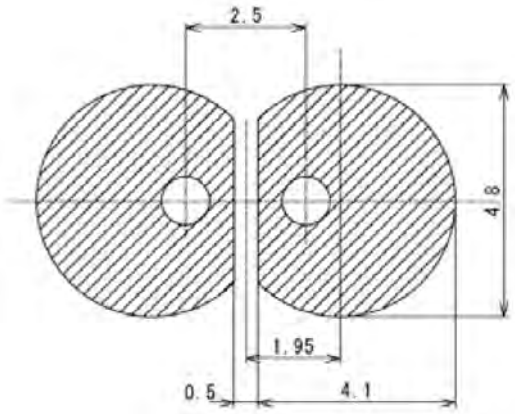

3. Soldering Conditions

- Solder the LEDs no closer than 3 mm from the base of the lead.
- DO NOT apply any stress to the lead particularly when heat.
- The LEDs must not be reposition after soldering.
- After soldering the LEDs, the lead should be protected from mechanical shock or vibration until the LEDs return to room temperature.
- When it is necessary to clamp the LEDs to prevent soldering failure, it is important to minimize the mechanical stress on the LEDs.
- Cut the LED leads at room temperature. Cutting the leads at high temperature may cause the failure of the LEDs.

Soldering Conditions

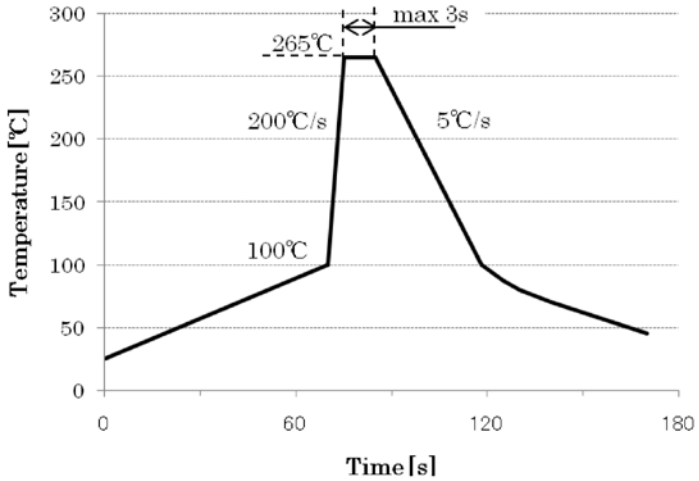

4. Static Electricity

- The LEDs are very sensitive to Static Electricity and surge voltage. So it is recommended that a wrist band or an anti-electrostatic glove be used when handling the LEDs.
- All devices, equipment and machinery must be grounded properly. It is recommended that precautions should be taken against surge voltage to the equipment that mounts the LEDs.