ROITHNER LASERTECHNIK GmbH
WIEDNER HAUPTSTRASSE 76 1040 VIENNA AUSTRIA
TEL. +43 1 586 52 43 -0, FAX. -44 OFFICE@ROITHNER-LASER.COM

# CO2-EVAL-K

- **Evaluation Kit for Carbon Dioxide (CO2) detection**
- **Based on Mid-IR LED and PD**
- **Contains preamplifier, driver and synchronous detector**
- **Ready for a quick and easy start**

RoHS COMPLIANT

## Description

**CO2-EVAL-K** is an evaluation kit for Carbon Dioxide (CO2) detection, based on Mid-IR LED and PD, and contains all necessary components for a quick and simple start.
The possibility to change the parts within the kit easily makes the kit a flexible and utility solution. Any additional Mid-IR component can be added by request.

## Packing Arrangement

CO2-EVAL-K contains:

- Light-emitting diode LED43-RW
- Photodiode PD43-03RW-AMP, with a built-in preamplifier
- LED driver PCB-driver-41 / PCB-driver-51 / PCB-mdriver-P (depends on customer request)
- synchronous detector PCB-sdetect-3P
- acrylic glass optical chamber (optional)

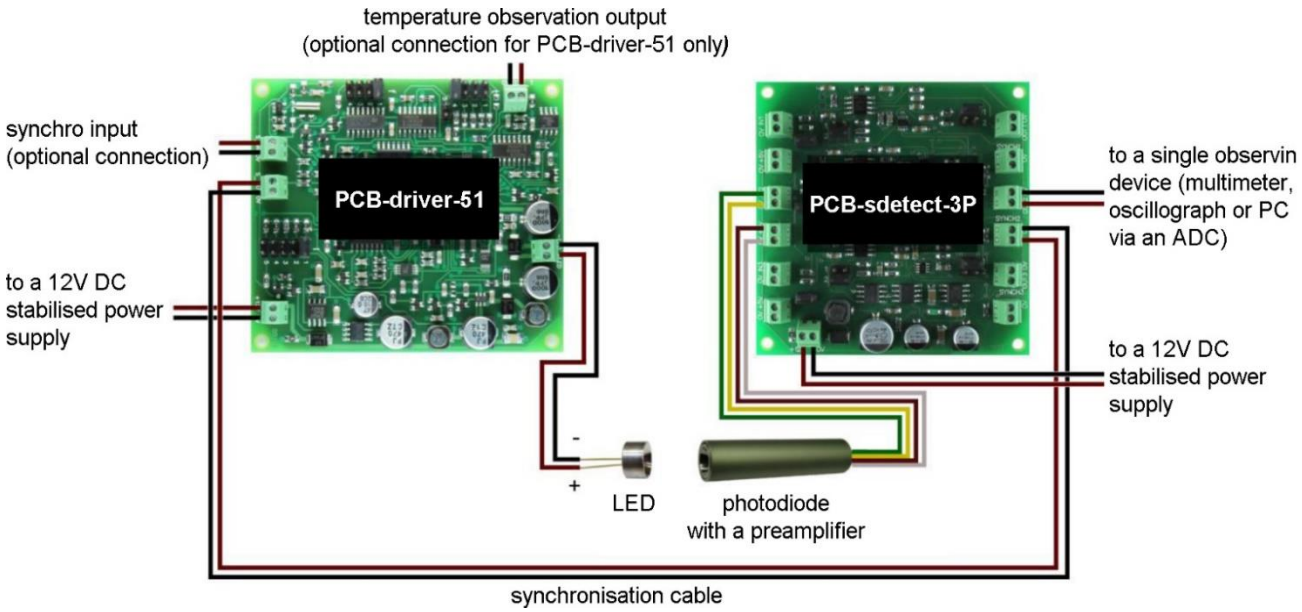

ROITHNER LASERTECHNIK GmbH
WIEDNER HAUPTSTRASSE 76 1040 VIENNA AUSTRIA
TEL. +43 1 586 52 43 -0, FAX. -44 OFFICE@ROITHNER-LASER.COM

# Overview Of Containing Components

**Light-Emitting Diode**

LED43-RW emitting diode with a peak wavelength at 4.3 µm, in TO-18 package with a parabolic reflector. For detailed information and set of characteristics, please refer to the appropriate technical passport.

**Photodiode with Built-In Preamplifier**

PD43-03RW-AMP with a cut-off wavelength at 4.6 µm, and a built-in preamplifier, mounted in an aluminum tube with a parabolic reflector.
PD preamplifier amplifies the current generated by photodiode and converts it into pulse voltage signal. There is straight correspondence between PD current and resulting output voltage, i.e. if the photocurrent from photodiode is a meander, the converted signal will be a meander too with the same frequency and pulse duration.
For detailed information and set of characteristics, please refer to the appropriate technical passport.

**Driver Unit**

LED driver PCB-driver-41, PCB-driver-51, or PCB-mdriver-P (depends on customer request).
A LED driver is a power supply for an LED. PCB-driver-41 and PCB-driver-51 have a set of adjustable parameters to customize the desired operation mode of an LED. PCB-mdriver-P provides operation at one fixed pulse mode.
For brief information about drivers, please refer to Appendix 1. For comprehensive information about the driver, please refer to the driver's instruction manual.

**Synchronous Detector**

PCB-sdetect-3P synchronous detector measures the voltage signal from the output of photodiode preamplifier and converts it to the DC voltage signal proportional to amplitude of voltage from input.
For comprehensive information about the synchronous detector, please refer to the appropriate instruction manual.

# Recommended Operation Mode For The Kit

**Driver settings (PCB-driver-41 and PCB-driver-51)**

| Parameter | Symbol | Value | Unit |
|---|---|---|---|
| LED Current | I | 0.6 | A |
| Pulse Duration | τ | 150 | µs |
| Frequency | f | 0.5 | kHz |

**Synchronous detector settings (PCB-sdetect-3P)**

| Parameter | Value | Unit |
|---|---|---|
| Signal Gain | x5 | Times |
| Averaging Time | 300 | ms |

**Note!**

Do not use 2 and 4 kHz driver frequency settings, since they are incompatible with 150 µs pulse duration setting.

ROITHNER LASERTECHNIK GmbH
WIEDNER HAUPTSTRASSE 76 1040 VIENNA AUSTRIA
TEL. +43 1 586 52 43 -0, FAX. -44 OFFICE@ROITHNER-LASER.COM

# Operating Instructions

1. Connect the preamplifier output with an input of PCB-sdetect-3P synchronous detector.

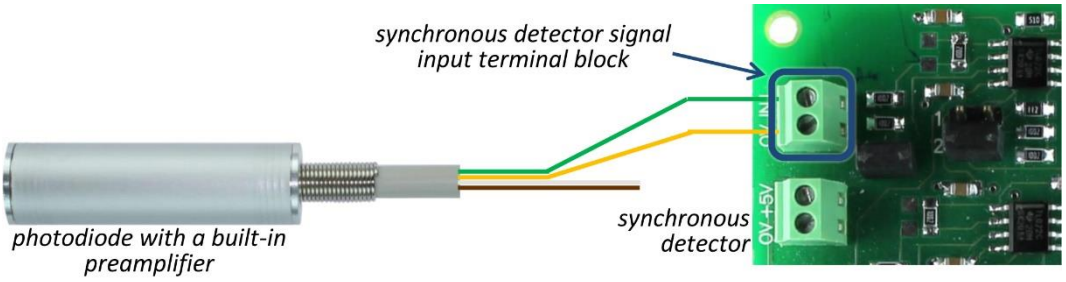


Green cord – to the signal input “+”; Yellow cord – to the signal input “0”

2. Connect a 5V power output of the PCB-sdetect-3P synchronous detector to the preamplifier power input.

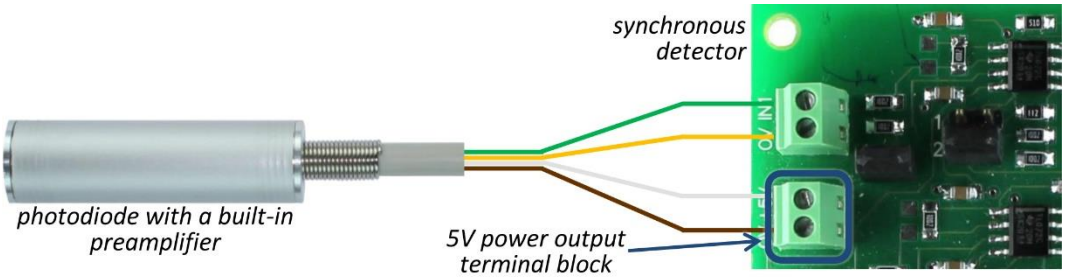


White cord – to the power output “+”; Brown cord – to the power output “0”

**Note!**

- Check all the connections before turning on the photodiode.
- Do not connect the photodiode to the multimeter.
- Do not touch the glass covering.
- Pay your attention to the colours of the cords; actual colours may differ from ones pointed in the present manual, so follow the instructions pointed in the technical data provided with the order.

3. Select the needed signal gain and averaging time on the PCB-sdetect-3P synchronous detector.

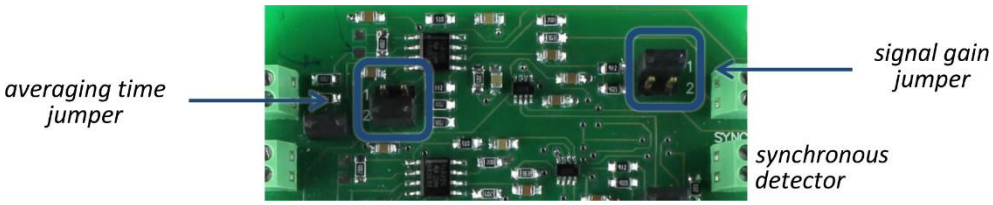


**Note!**

You can find out more about adjustment of the signal gain and averaging time in the appropriate PCB-sdetect-3P synchronous detector manual.

4. Connect the LED pins to the LED connection terminal block of the LED driver.

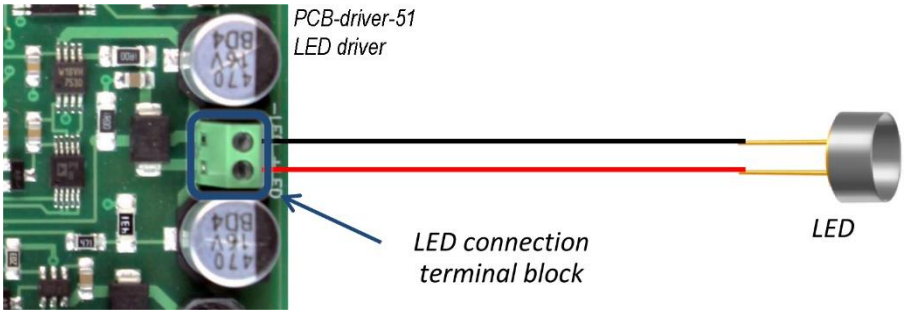

**Note!**

All driver connections in this manual are pointed for D-51i LED driver, connections with other drivers should be done similarly.

**CAUTION!**

The pin marked with red dot must be connected to the "+" sign of the driver terminal block.

5. Connect the synchronisation output of the LED driver with the synchronisation input of the synchronous detector via synchronisation cable.

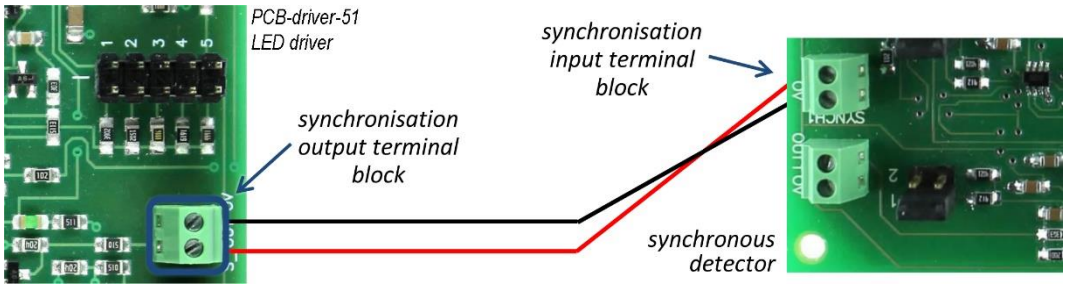


6. Select the needed mode of the LED driver.

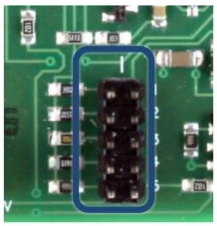

*current adjustment jumper*

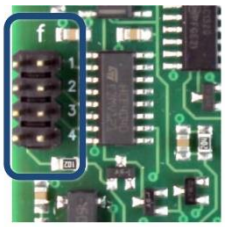

*frequency adjustment jumper*

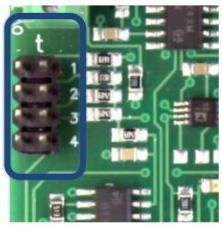

*pulse duration adjustment jumper*

**Note!**

You can find out more about driver modes and their adjustment in the appropriate driver instruction manual.

7. Connect signal output terminal block of the PCB-sdetect-3P synchronous detector with signal observing device (multimeter, oscillograph or PC via ADC).

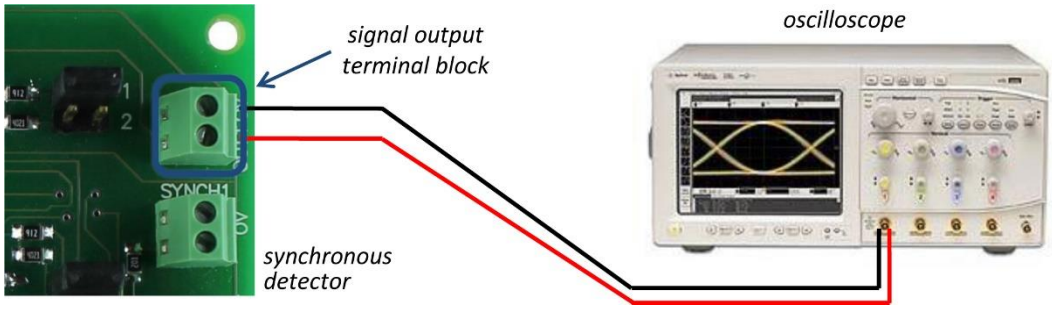


8. Connect a 12V DC stabilized power supply to the LED driver and PCB-sdetect-3P synchronous detector (red wire to the "+"; black wire to the "–").

## Precautions & Notes

- Turn on the power supply of the LED Driver and PCB-sdetect-3P synchronous detector only after all connections are made and tested
- Do not switch driver regimes during operation.
- Do not use multimeter to control and adjust current of the LED.
- Do not bend and/or twist LED and photodiode pins; otherwise the optical system will get damaged.

ROITHNER LASERTECHNIK GmbH
WIEDNER HAUPTSTRASSE 76 1040 VIENNA AUSTRIA
TEL. +43 1 586 52 43 -0, FAX. -44 OFFICE@ROITHNER-LASER.COM

# Appendix 1

**PCB-driver-41**

provides pulse mode operation. Using this mode it is possible to

- choose one of five current values (0.2/0.6/1/1.5/1.9 A) and
- select one of four frequencies (0.5/1/2/4 kHz) and
- choose pulse duration within five values (5/10/20/50/150 µs).

**PCB-driver-51**

has the same characteristics as PCB-driver-41, but additional features temperature control:

The possibility to define LED p-n junction temperature using current-voltage dependence. Driver generates the low current signal for plugged LED, measures and outputs the voltage. Using the obtained voltage value it is possible to calculate the intrinsic LED temperature.

**PCB-mdriver-P**

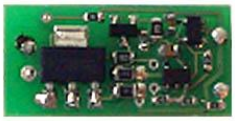

is a cost-effective driver that enables LED operation at fixed pulsed driving mode: 2 A current, 2 kHz frequency and 5 µs pulse duration.